JFET & MOSFET

Nafees Ahamad

Asstt. Prof., EECE Deptt, DIT University, Dehradun

Website: www.eedofdit.weebly.com

Introduction

- In an ordinary transistor, both holes and electrons play part in the conduction process, so it is know as bipolar transistor[bipolar junction transistor (*BJT*)].
- Disadvantages of *BJT*
  - Low i/p resistance
  - Considerable noise level

BJT is a current control device

- Above disadvantages are overcome by Field Effect Transistor (FET)- *current conduction is by one type of carrier*

Types of Field Effect Transistors

- There are two basic types of field effect transistors:
- (***i***) Junction field effect transistor (*JFET*)
- (***ii***) Metal oxide semiconductor field effect transistor (*MOSFET*)

Junction Field Effect Transistor (JFET)

- *It is a three terminal semiconductor device in which current conduction is by one type of carrier i.e., electrons or holes.*
- The *JFET* has high input impedance and low noise level.
- The o/p characteristics are controlled by input voltage unlike input current in BJT

Constructional details of JFET

- A *JFET* consists of a *p*-type or *n*-type silicon bar containing two *pn* junctions at the sides as shown in Fig.
- The bar forms the conducting channel for the charge carriers.
- If the bar is of *n*-type, it is called *n-channel JFET.*
- if the bar is of *p*-type, it is called a *p-channel JFET.*
- The two *pn* junctions forming diodes are connected internally and a common terminal called *gate* is taken out.
- Other terminals are *source* and *drain* taken out from the bar.
- Thus a *JFET* has essentially three terminals *viz.*, *gate* (*G*), *source* (*S*) and *drain* (*D*).

Constructional details of JFET…

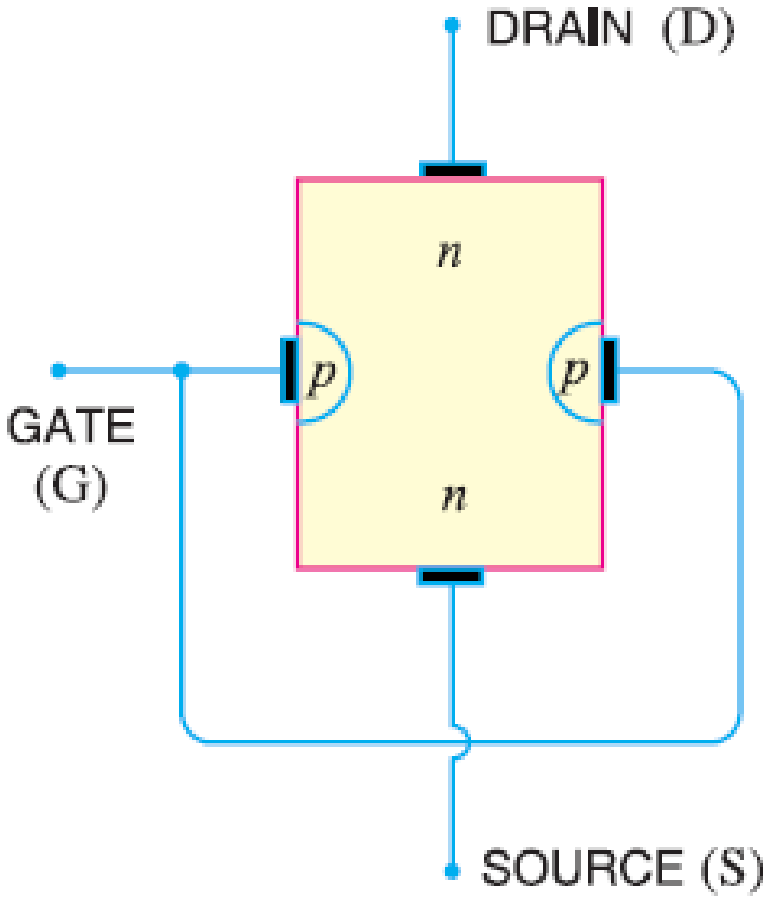

n-Channel JFET

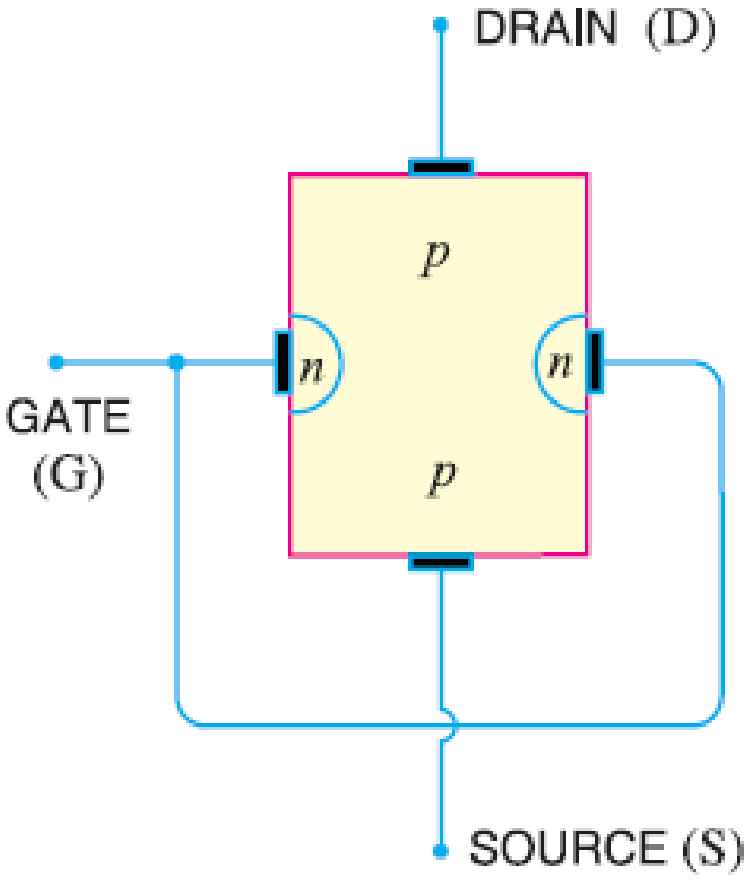

p-Channel JFET

Constructional details of JFET…

- The following points may be noted :
- (***i***) The input circuit (*i.e.* gate to source) of a *JFET* is reverse biased. This means that the device has high input impedance.
- (***ii***) The drain is so biased w.r.t. source that drain current *ID* flows from the source to drain.
- (***iii***) In all *JFETs*, source current *IS* is equal to the drain current *i.e.* $I_S = I_D$.

Schematic Symbol of JFET

- Schematic Symbol of JFET

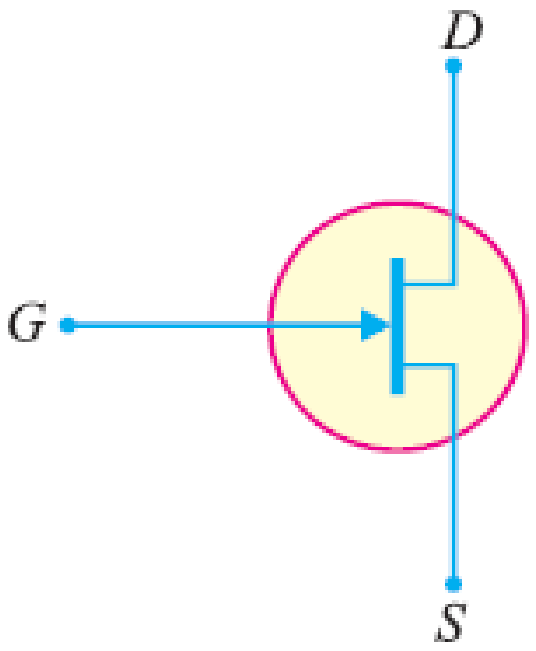

n-Channel *JFET*

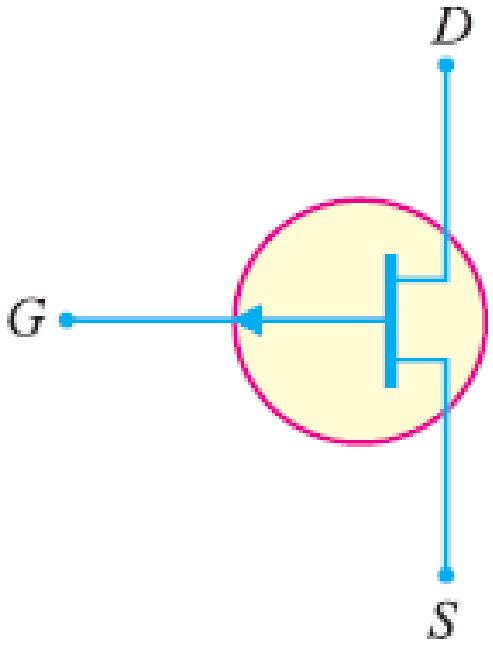

p-Channel *JFET*

Working of JFET

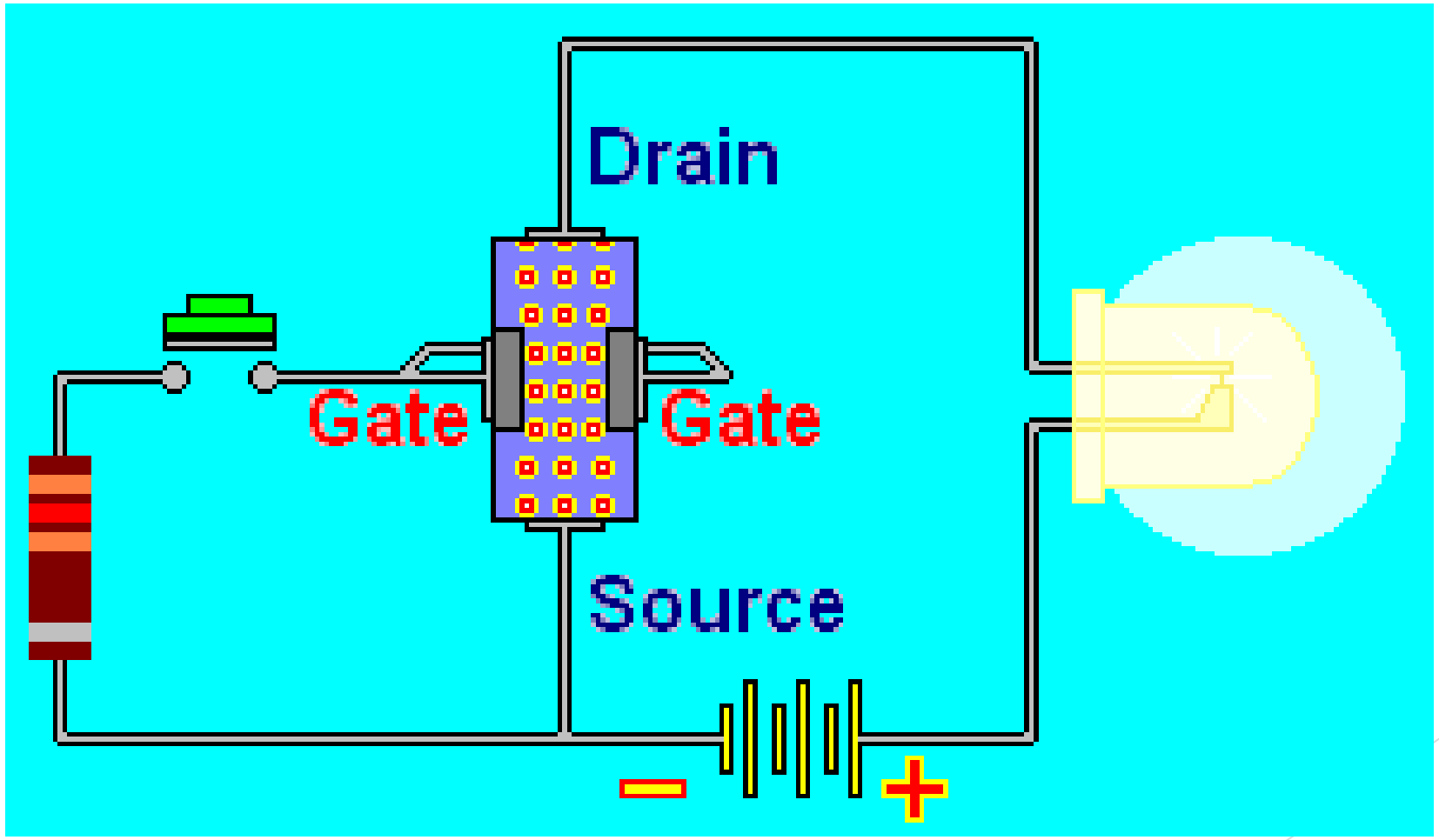

Working of JFET

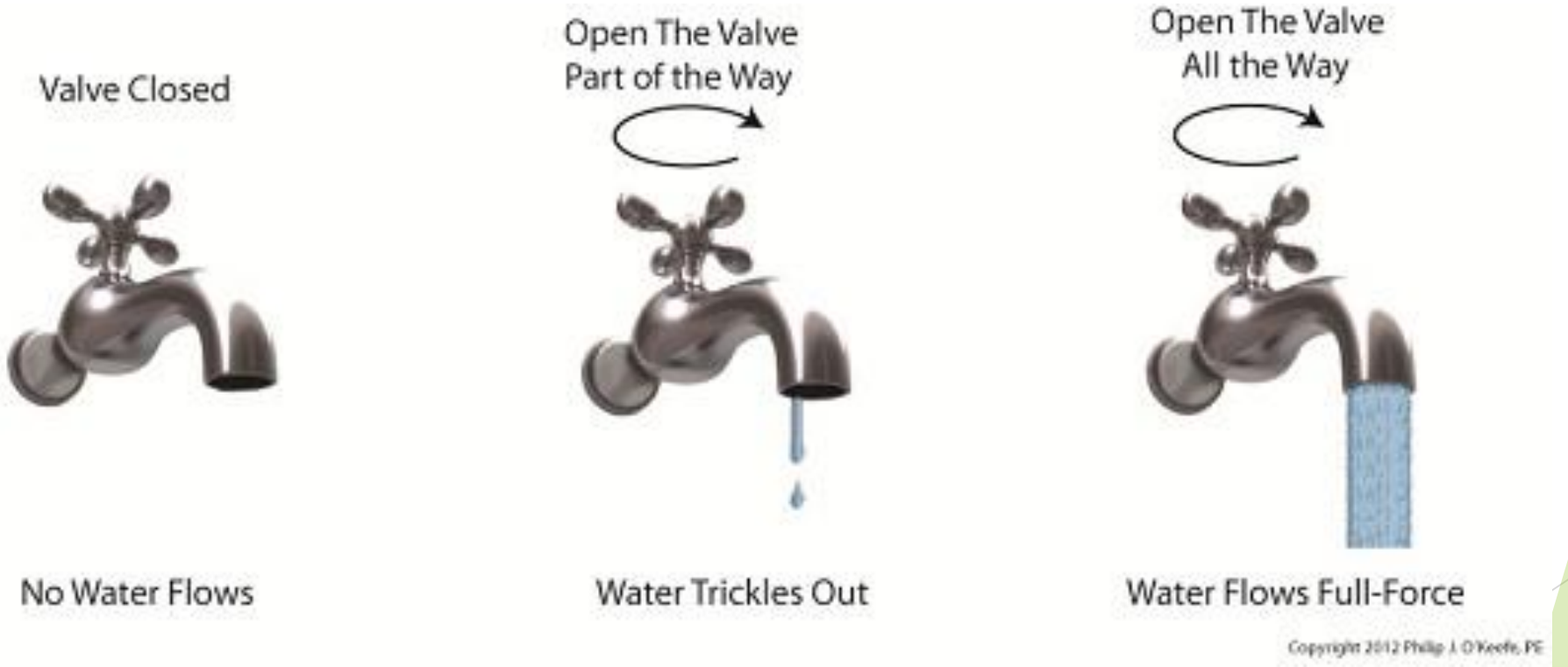

Output Characteristics of JFET

- Drain-Source voltage Vs Drain Current at constant gatesource voltage (V_{GS})
- V_{DS} Vs I_D at V_{GS} = *Constant*

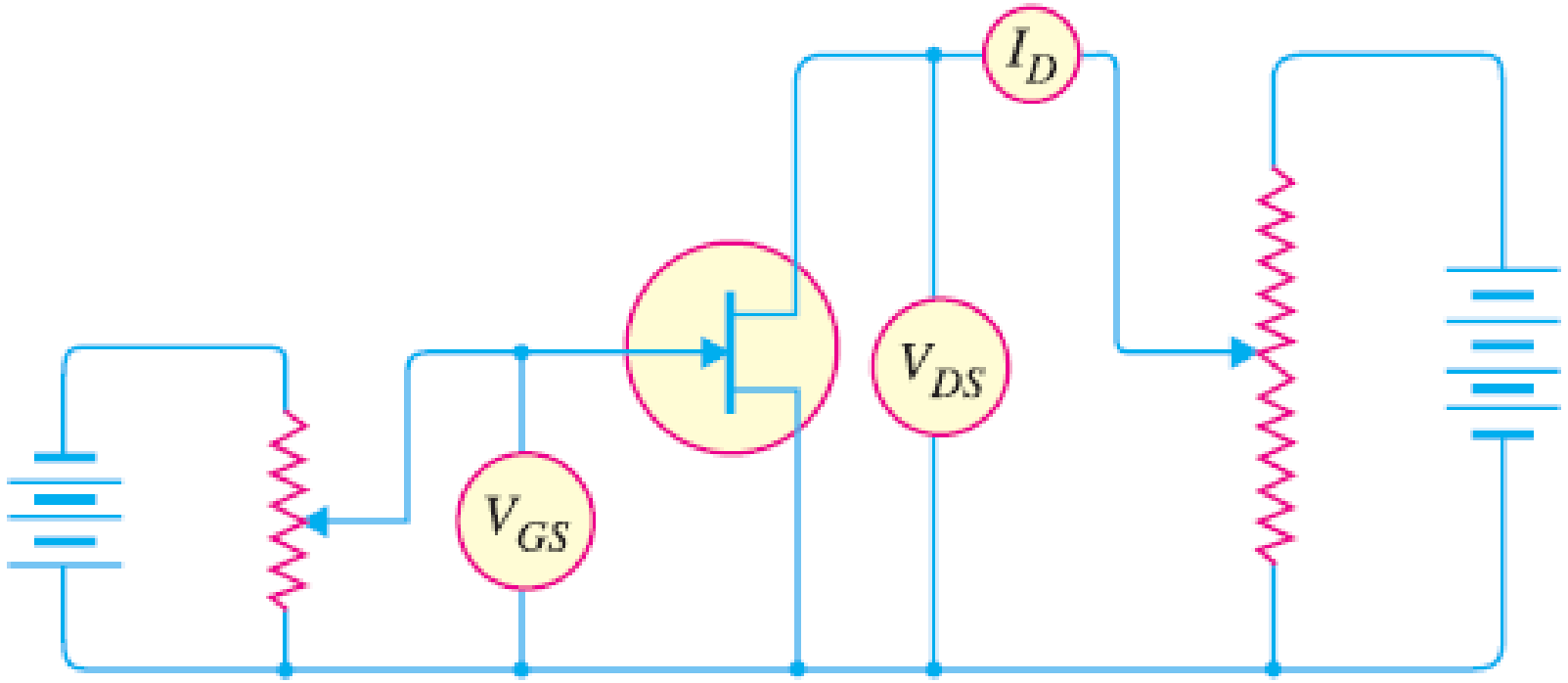

Output Characteristics of JFET…

- *V_P = Pinch off voltage*
- *After which I_D is constant*

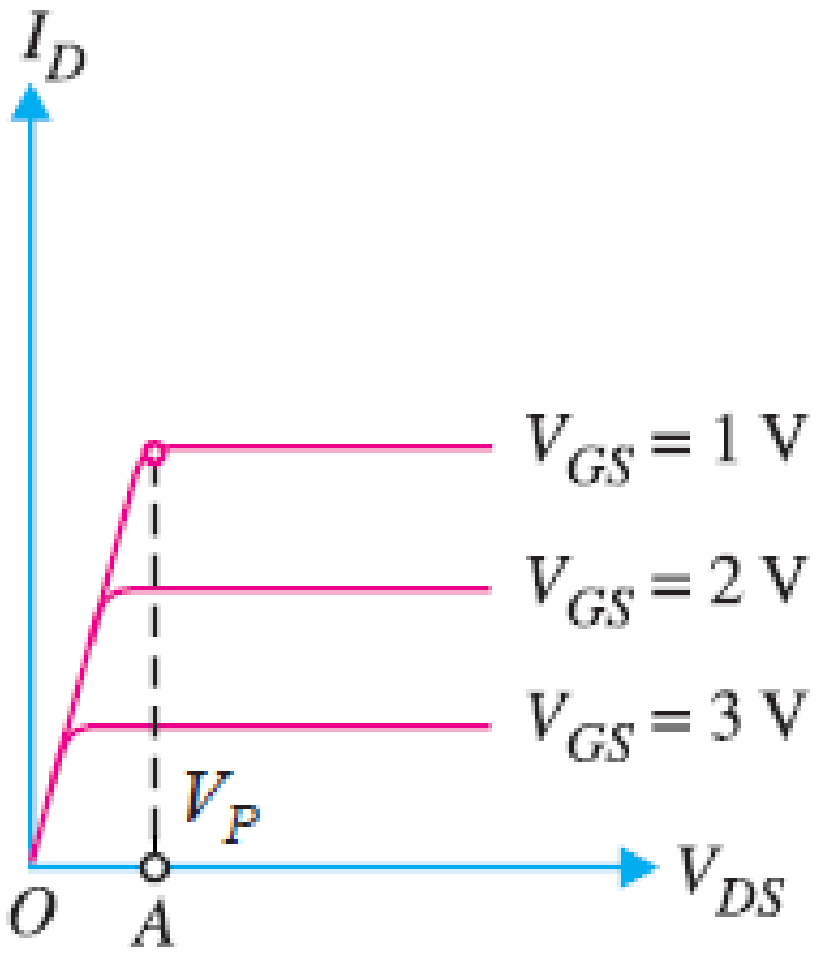

Metal Oxide Semiconductor FET (MOSFET)

- *In a JFET* gate *must* be reverse biased for proper operation of the device.
- This means that we can *only* decrease the width of the channel. (*i.e.* decrease the conductivity of the channel)
- *A field effect transistor (FET) that can be operated in the enhancement-mode* (*i.e.* increase the conductivity of the channel) *is called a* ***MOSFET***.

Types of MOSFETs

- Two types
- 1. Depletion-type *MOSFET* or ***D-MOSFET***
- 2. Enhancement-type *MOSFET* or ***E-MOSFET***

1. Depletion-type *MOSFET* or ***D-MOSFET***

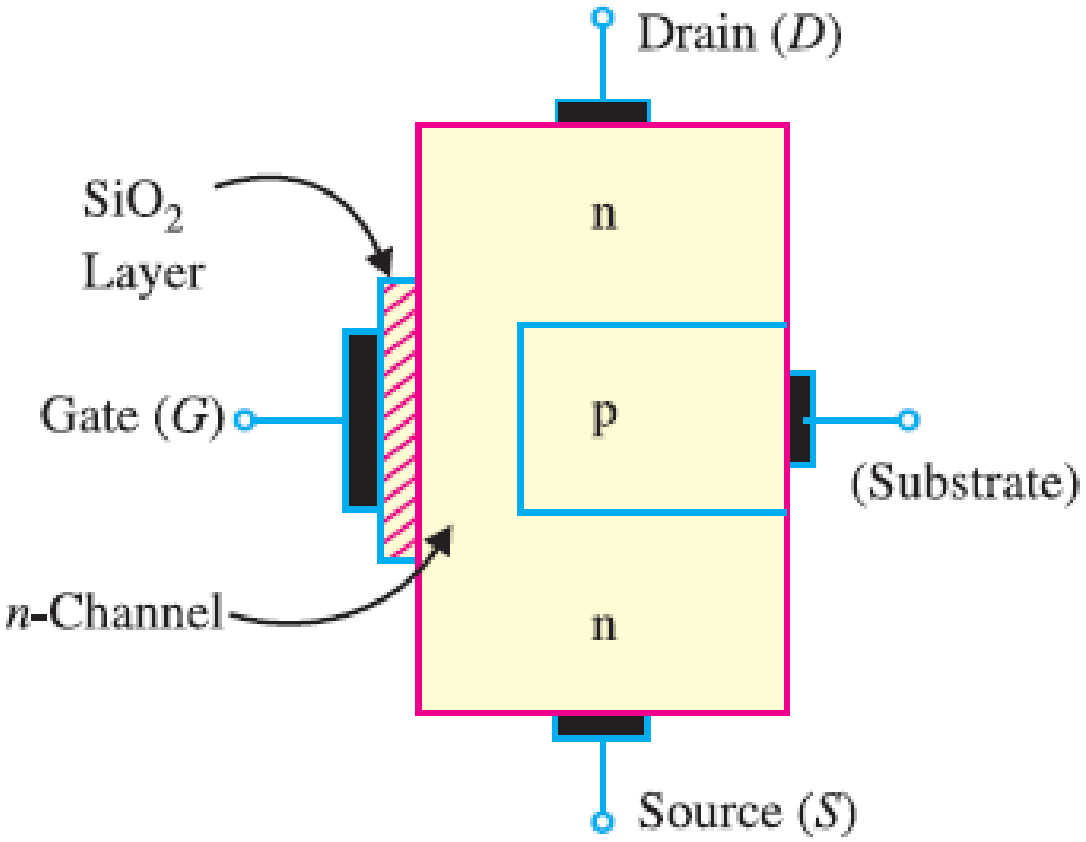

n-Channel D-MOSFET

- 2. Enhancement-type *MOSFET* or ***E-MOSFET***

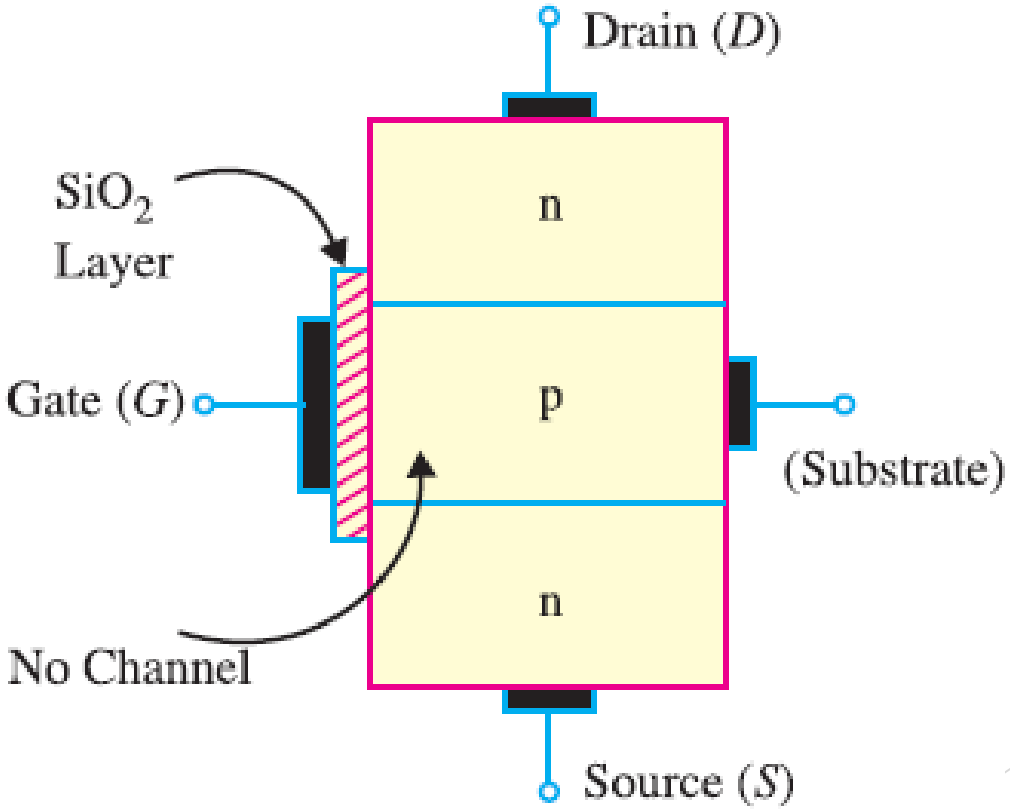

n-Channel E-MOSFET

D-MOSFET Transfer Characteristic

- V_{GS} Vs I_D

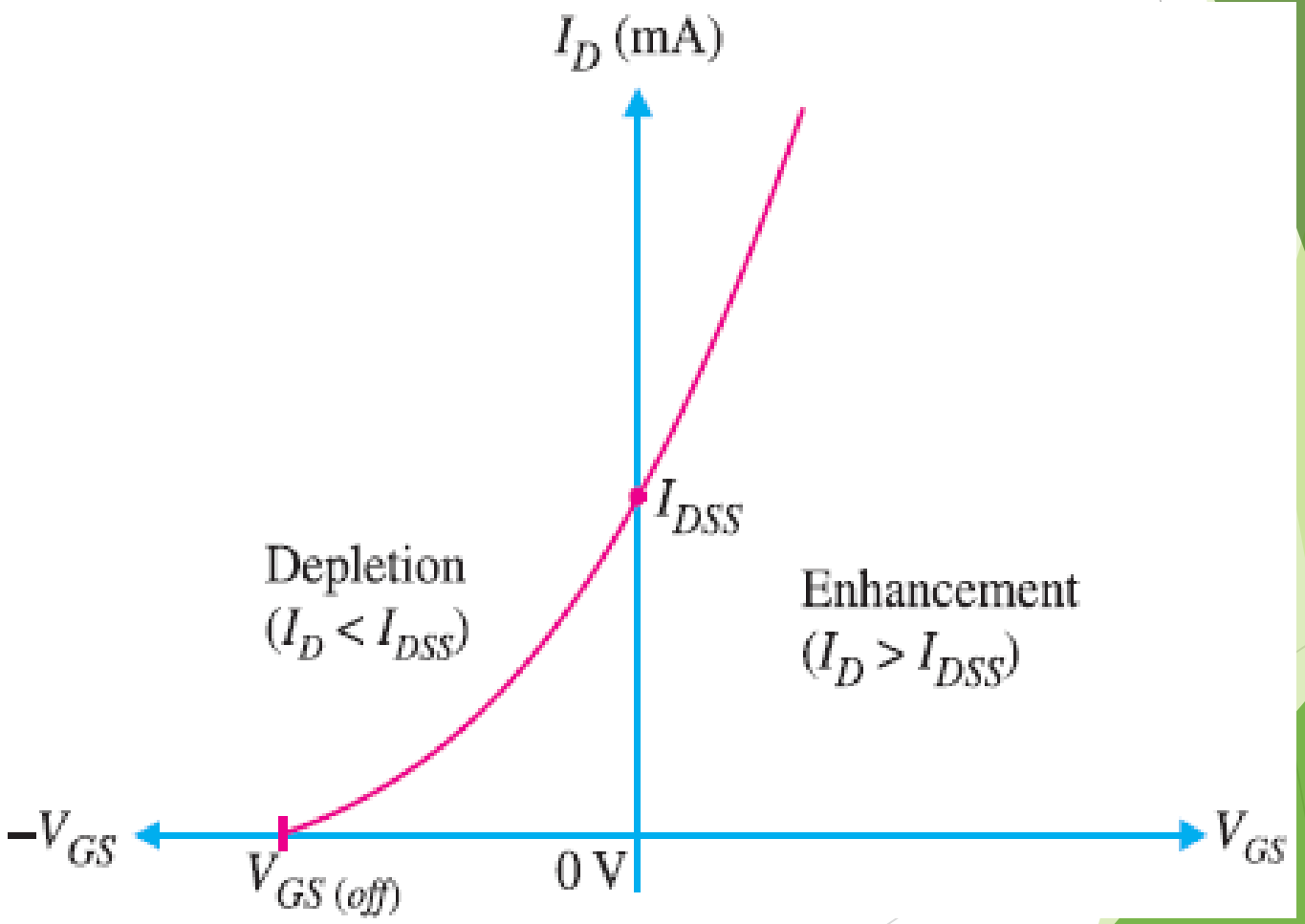

E-MOSFET Transfer Characteristic

- *The minimum value of V_{GS} that turns the E-MOSFET ON is called* ***threshold voltage*** *[V_{GS} (th)].*

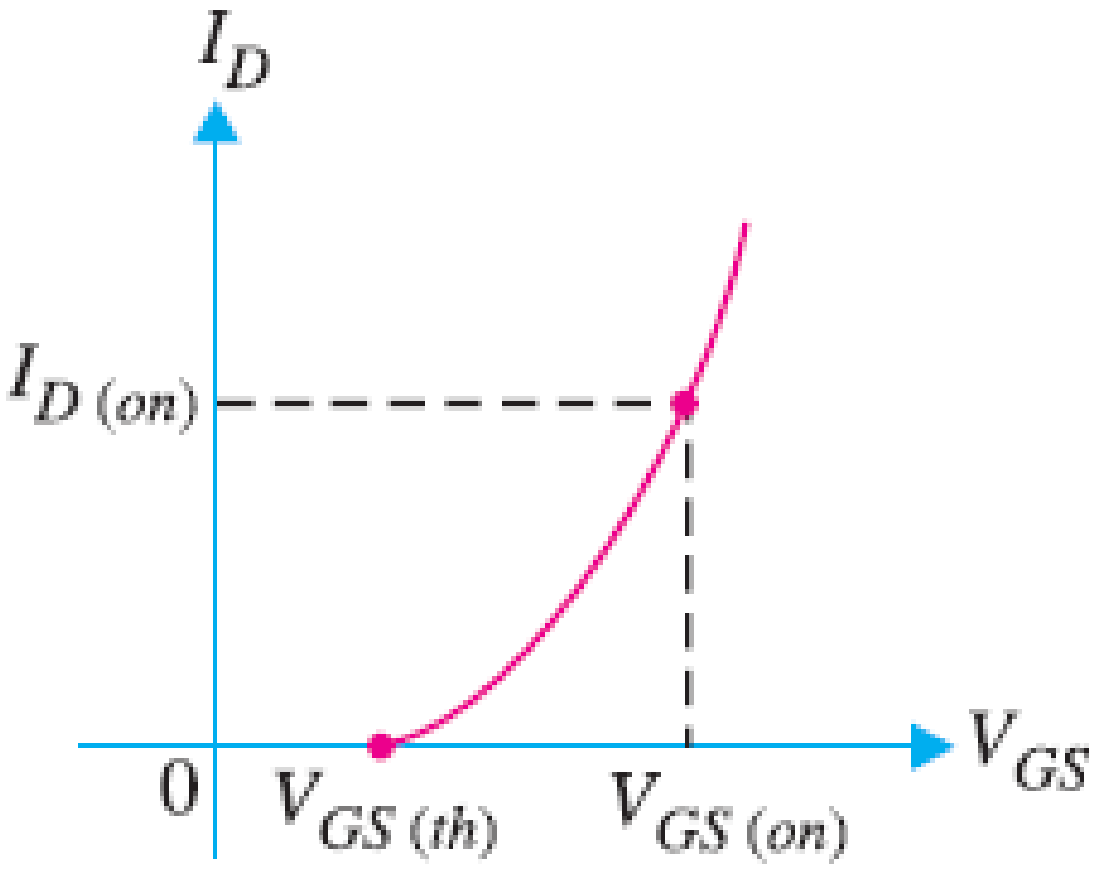

Thank you