UNIT 1: INTRODUCTION

1.) Overview of power system operation: The electrical energy is the most convenient form of energy in comparison to all the other forms of energy. However the biggest drawback of it is that it cannot be stored in large amounts directly in the form of electrical energy. Of course it is possible to store it in small amounts in the form of rechargeable batteries. But no method for large scale storage of electrical energy has been devised so far. Therefore electrical energy has to be generated and supplied instantaneously. The operation of power system becomes very complex due to the following factors:

1. At every instant the total active power generated must equal the total active power demand plus losses.
2. The total active power demand varies from instant to instant, day to day and season to season. Power system has to meet this varying demand all the time.
3. Loads also require lagging reactive power. This must also be produced and supplied.
4. The voltage and frequency of the system must be maintained within limits as per the government regulations.
5. Energy must be generated in such a way that the overall cost is minimum.
6. Any part of the power system may suffer a forced outage at any time. The power system must be ready to meet such emergencies.
7. Because of those reasons which are beyond the control of power system engineers, the load may increase unexpectedly (beyond the forecast value) and this additional load must also be supplied.

2.) Structure of power system

Introduction: The electrical power is the most convenient form of energy since it is available to the consumer at the very instant it is switched on. The other benefits of electrical energy are the ease with which it can be generated in bulk and transmitted efficiently and economically over long distances.

An electrical power system is a complex network of several subsystems which transform other types of energy into electrical energy, transmit and distribute it for consumption at the consumer's terminals. The fig.1 shows the general structure of power system whereas the fig.2 shows the single line diagram of a typical power system.

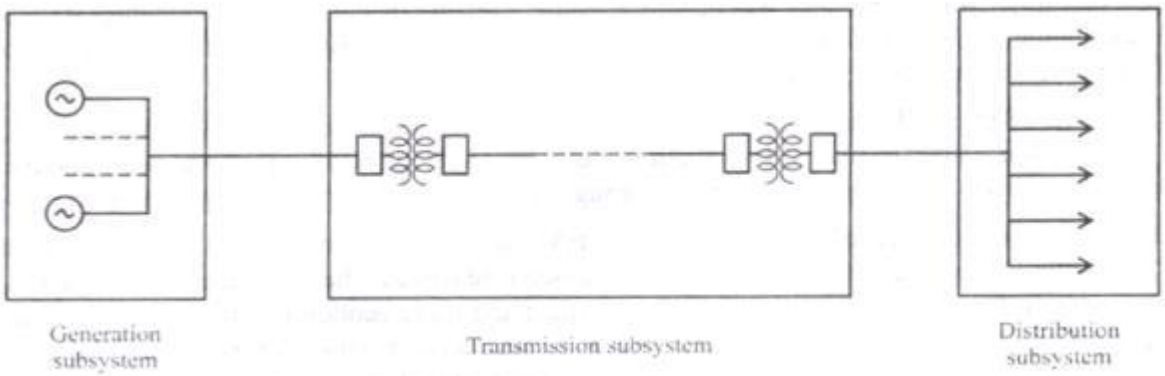

Fig. 1 Structure of a power system

Constituents of a Power System: The power system consists of three subsystems which have clearly demarcated functions. The coordinated working of all the three subsystems is absolutely essential as they are parts of the same system. The subsystems are:-

i. The generation subsystem.
ii. The transmission & distribution subsystem.
iii. The load subsystem.
iv. The protection & control subsystem.

(a) **Generation** – The generation subsystem maybe called GENCO, responsible for generating electric power as per the predicted load requirements. The generating subsystem consists of a group of generating stations, which converts some form of primary energy into electrical energy. The generating station (or power station) of a power system consists of prime mover, such as turbine driven by water, steam or combustion gases which is coupled to an electric generator. The prime mover rotates the generator which produces electrical energy. The 3 phase a.c. generator also called alternator is one of the essential components of power system.

Another major component of a power system is the transformer. It transfers power with very high efficiency from one voltage level to another level. The power transferred from primary to secondary is same exactly except for losses in transformer. Step – up transformers are used for transmission of power. At the receiving end step – down transformers are used to reduce the voltage to suitable values for distribution or utilization. In a modern utility system, the power may undergo four or five transformations between generator and ultimate user.

(b) **Transmission and Distribution** – The transmission subsystem maybe called TRANSCO. The purpose of an overhead transmission network is to transfer electric energy from generating units at various locations to the distribution system which ultimately supplies the load. The transmission lines allow interconnect neighbouring power stations which not only allows economic dispatch of power between regions during emergencies.

High voltage transmission lines are terminated in substations which are called H.V. substations or receiving substations or primary substations. The function of some substations is switching circuits in and out of service. Hence they are referred as switching substations.

The portion of the transmission system that connects the H.V. substations through step down transformers to the distribution substations are called sub-transmission network. However there is no clear demarcation between transmission and sub-transmission voltage levels. The sub-transmission voltages typically range from 66 kV to 132 kV. Some heavy industrial consumers are connected to the sub-transmission system, for example, BHEL Haridwar is connected directly to a 132 kV substation.

The distribution system is that part which connects the distribution substations to the consumer's service entrance equipment. The distribution subsystem maybe called DISCOM which is the actual link between system and the consumers. The primary distribution lines are usually in the range of 4 kV to 11 kV. Some small industrial consumers are served directly by the primary feeds. The secondary distribution network reduces the voltage for utilization by commercial and residential consumers. A distribution system is designed to supply continuous and reliable power supply at the consumer's terminal at minimum cost. A typical distribution system is shown in fig. 2

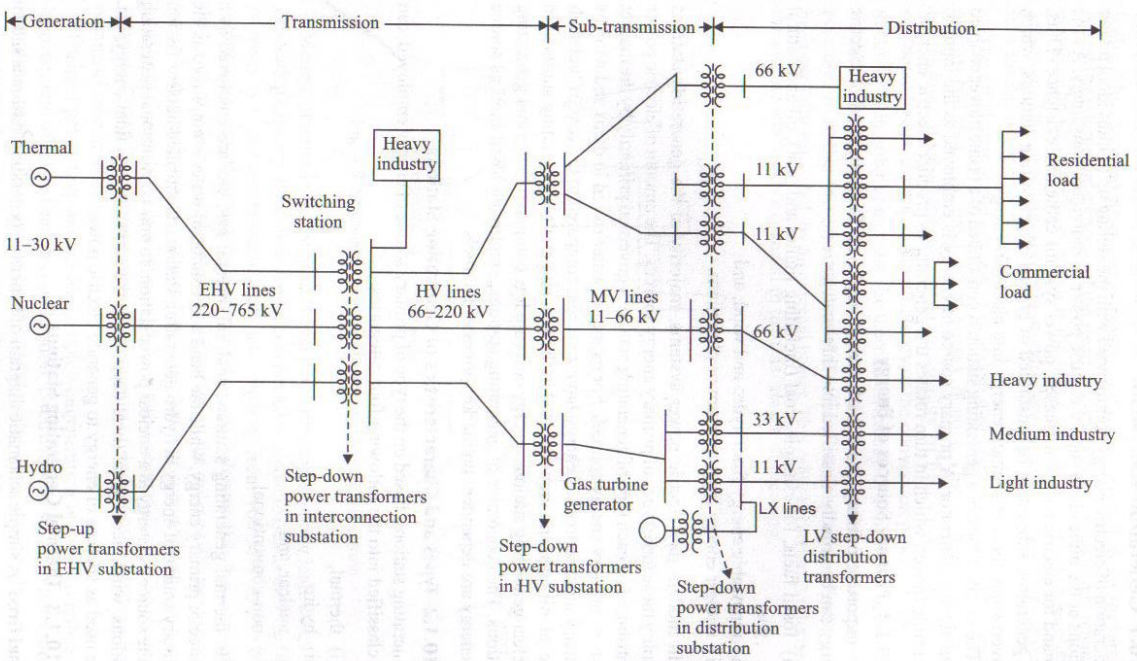

Fig. 2 Single line representation of an ac network

(c) **Loads** – From the viewpoint of a power supplier any component which is consuming electrical energy is a load. The loads of a power system are divided into industrial, commercial and residential. Very large industrial loads maybe served from the transmission system. Large industrial loads are served directly from the sub-transmission network and small industrial loads are served from the primary feeder network. The commercial and residential loads are served from the secondary feeder network.

(d) **Protection & Control** – The protection and control subsystem consists of relays, switchgear and other control devices which protect the various subsystems against faults, overloads and ensures efficient, reliable, economic operation of power system. It is necessary to monitor the entire system in a control center to ensure reliable and economic operation. The modern control centres of today are well equipped with online computers performing the entire signal processing through the remote acquisition system.

In India regional and national power grids are established to facilitate transfer of power within and across the regions with reliability, security and economy. The Indian Power Grid system is divided into five regional grids.

3.) Power system control centre: The power systems of today are essentially very huge in terms of energy generated, transmitted and utilized, number of customers and total investment. The installed capacity in USA exceeds 1000 GW with annual energy generated exceeding 5000 TWh. The installed capacity in India exceeds 140 GW with annual energy generated exceeding 700 TWh. The system is growing continuously with more generating plants, transmission lines and distribution lines being added every month. The power system feeds a very large number of domestic, commercial, industrial, agricultural, electric traction and other customers.

The increase in unit sizes, growth of interconnections and the need to maintain the system in normal mode requires sophisticated control, instrumentation and protection. The multiplicity of monitoring instruments in the control room and their distance apart make the observation of more than a few ones almost impossible, especially during the intense activity of plant start – up. The operators are called upon to visualize the implications of a variety of changing plant parameters and take critical decisions. These requirements led to the

development and application of more advanced solid-state modular instruments, computer based direct digital control and data processing systems.

A modern power system control centre has the following functions to perform: -

1. Automatic generation control
2. Economic load dispatch
3. Automatic voltage control
4. On – line load flow
5. On – line short circuit
6. State estimation
7. Steady state security analysis
8. Security monitoring
9. Supervisory control
10. Automatic trouble analysis
11. Emergency control like load shedding, generator tripping
12. Automatic circuit restoration etc.

The computer system involves dual configuration with external interfaces to monitor the data. The first one is a process computer linked by telechannels to various generating and sub – stations for data acquisition. The second one is a larger one where major calculations are carried out and is linked to the process computer. For real – time computer control of power systems, the following basic components are needed:

1. System wide instrumentation
2. High speed digital telemetry
3. Central processing unit
4. Memory and bulk storage
5. Interactive display
6. Software (operating and application)

The real time computer is designed to perform data acquisition, storage and retrieval, data processing, interactive display and remote signaling and control. It consists of modems and interfaces, CPU, memory and bulk storage & input-output devices like display devices, card reader, printer etc. The fig.3 shows a functional block diagram of a real time computer.

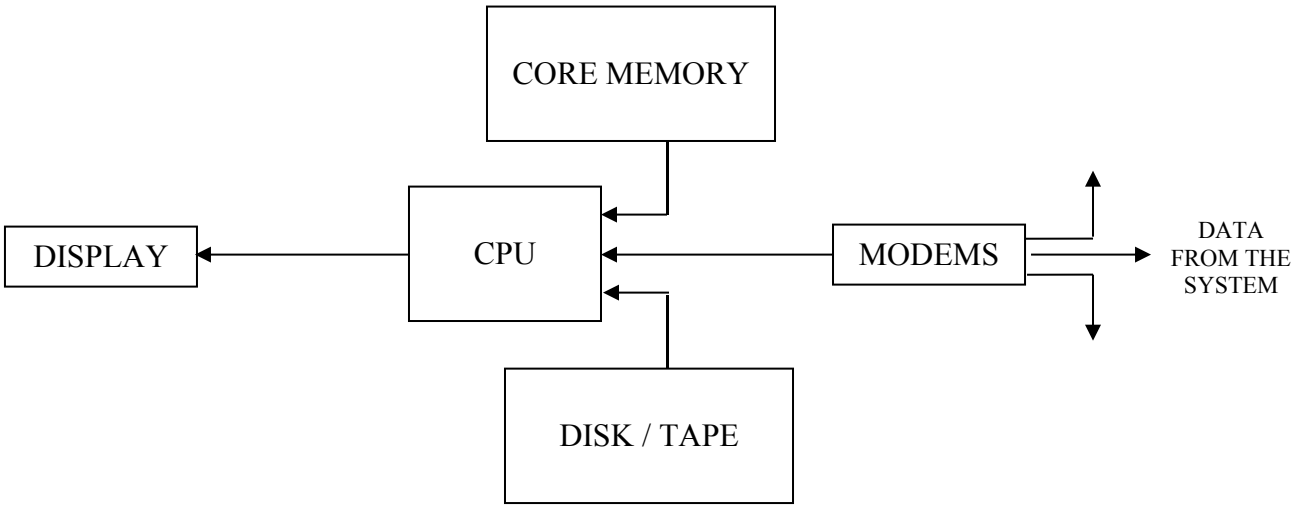

Fig. 3 functional block diagram of a real time computer

The database consists of static data, dynamic data and software. The static data consists of the details of lines, transformers, generators etc. The dynamic data includes line flows, voltage

levels, breaker condition, generation and demand. The software includes operating software, application software and support software.

The operating software is the system software for real time operating compiling routines, file management etc. The application software consists of programs written for power system operation and control, which were listed earlier. The support software consists of diagnostics, debugging, maintenance and testing programs. The computer control can take any of the following forms:

i. Off – line computer control
ii. Computer assisted control
iii. On – line computer control

For planning and operating computation, which are carried out at infrequent intervals, off – line computer calculation suffice. The results are to be updated at regular time intervals. In the computer- assisted control scheme, necessary data is transmitted at regular intervals to the computer located in a central control station and its decisions are communicated to the human operator.

For short time processes extending up to a few minutes, the system is under continuous control of direct acting devices. Under emergency conditions, the on – line computer which processes the data continuously sends commands to the direct acting devices according to a pre – planned strategy to prevent danger to the system.

The type of computer control, the configuration and the peripherals used are ultimately decided by the cost that the utility industry is willing to invest.

Level Decomposition in Power System with respect to power control centre – The power systems are characterized by strong hierarchical structure order. Accordingly, control strategy can be devised to fit into the hierarchical structure advantageously as given in table 1

Level	System	Monitoring and Control
First Level	Generating stations and substations	Local control centre
Second Level	Sub transmission and transmission networks	Area load dispatch centre
Third Level	Transmission system	State load dispatch centre
Fourth Level or Top Level	Interconnected power systems	Regional control centre

Local Control Centre – A number of control functions can be performed locally at power generating stations and substations using local equipment and automatic devices. The following are some of the typical control applications of a local control centre:

1. Local monitoring and control.
2. Protection
3. Auto reclosures.
4. Voltage regulation.
5. Capacitor switching.
6. Feeder synchronization.
7. Load shedding in the event of necessity
8. Network restoration

Area Load Dispatch Centre – A group of generating stations and substations alongwith the associated network and loads may be considered as a unit for control under an area load dispatch centre. The area control centre receives information and processes if for appropriate control action.

State Load Dispatch Centre – The minute to minute operation of the power system at the state level may be carried out by the state load dispatch centre. It may have the following functions:

1. System generation, load monitoring and control.
2. System wide state monitoring and control.
3. Circuit breaker state monitoring and control.
4. Load shedding and load restoration.
5. Supervisory control for lines and equipment states.
6. System alarm monitoring and corrective action
7. Planning and monitoring of system operations.

Regional Load Dispatch Centre – The regional load dispatch centre may be regarded as a coordinating and monitoring centre for state level dispatch centres with the following main objectives:

1. Integrated operation of state level dispatch centres.
2. Operation and maintenance schedules for the generating plant.
3. Operation and maintenance schedules for maximum capacity utilization.
4. Monitor and control inter state power transactions.
5. Monitor and control inter regional power transactions.

Hierarchy of power system operation and control in India – The total power system in India is not being operated in totally integrated manner. However attempts are being made to achieve full integration. The National Load Dispatch Centre headquartered at New Delhi is the coordinating agency. Then there are five regional load dispatch centres as follows:

A. Northern Region load dispatch centre at New Delhi covering the states of Haryana, Himachal Pradesh, Jammu & Kashmir, Rajasthan, Uttar Pradesh, Delhi, Uttarakhand and union territory of Chandigarh.
B. Western Region load dispatch centre at Mumbai covering the states of Gujarat, Madhya Pradesh, Maharashtra, Chattisgarh, Goa and union territories of Daman, Diu, Dadra and Nagar Haveli.
C. Southern Region load dispatch centre at Bangalore covering the states of Andhra Pradesh, Karnataka, Tamil Nadu, Kerala and union territories of Pondicherry and Lakshadweep.
D. Eastern Region load dispatch centre at Kolkata covering the states of West Bengal, Bihar, Orissa, Sikkim, Jharkhand.
E. North Easter Region load dispatch centre at Shillong covering the states of Assam, Manipur, Meghalaya, Nagaland, Tripura, Arunachal Pradesh, Mizoram.

The third level of hierarchy consists of state load dispatch centres which are stationed in each state capital. Remote terminal units are installed at many points in each state. The fig.1 shows the hierarchy of power control centre in India.

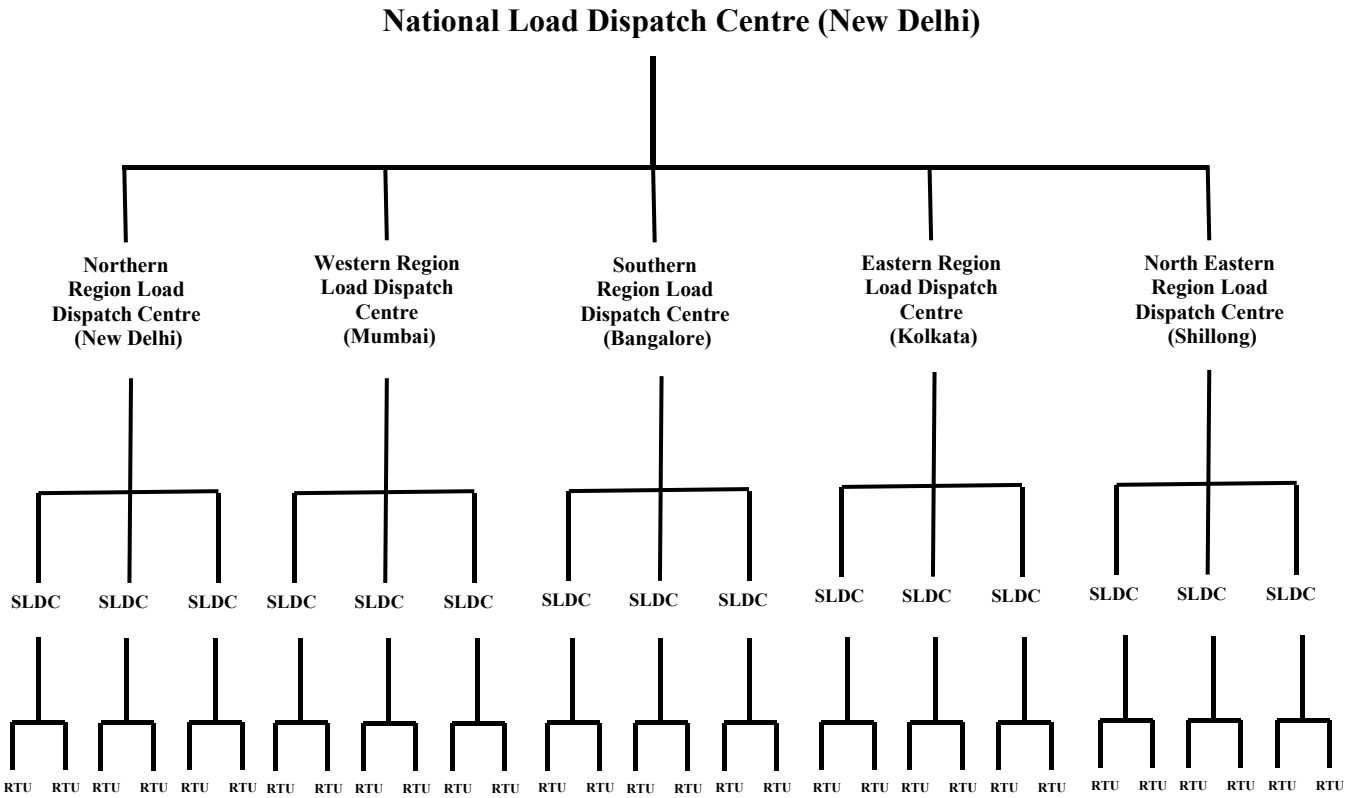

Fig.1

Hardware requirements for computer control of power system – The main equipment is a computer with enough storage capability. Many years ago main frame computers were used for this purpose but now desktop computers also have huge storage capability and are sufficient for most power systems. In an energy control centre, computers area connected in ring formation. All computers have backup computers also. The main computer is used for online program execution. The other computers are for duties like data acquisition etc. The standby computers are used for emergency duty. Some CROs, printers are also there. The standby computer is kept updated so that there is no loss of data or control. The changeover from main computer to standby computer can be manual or automatic but mostly it is automatic. The communication channels go out from the station to remote terminal units. Computer based telemetry and data processing facilities are also provided.

The modern trend is to use computers for relaying also. The advantages of using computers for relaying are logging capability and application expansion possibility. Accuracy, fast response and overall economy are the other advantages. The numerical relays sample the values of current, voltage etc. which are then converted to digital form using analog to digital converters and fed to the computer.

Software for computer control of power system – The computers used in power system control centre are equipped with requisite softwares for performing the following functions:

1. Online security monitoring and state estimation.
2. Data acquisition, supervisory control etc.
3. Real time monitoring and control
4. Operating systems.

SCADA (Supervisory Control and Data Acquisition System) – A lot of data is required about the operating conditions of a power system when proper, efficient energy management needs to be carried out. A large number of operations have to be carried out at unattended locations from the operating centre. In many cases remote operation of a device situated at a remote location from a control centre needs to be carried out as the cost of providing a personal for the operation to be carried out the location maybe prohibitive. Not only that if the operation requires a personal to be send to the remote location for operation of the device then it will lead to a considerable delay. Such delays may result in long outage durations and poor reliability. SCADA systems have been developed to overcome such problems. The need to control remote operations and monitor them led to development of SCADA. The main functions of SCADA are as follows:

Data Acquisition: To provide data, measurements and status information to operator
Plotting: To plot different measurements in real time regime.
Supervisory Control: To operate and control circuit breakers remotely.
Alarms: To send alarm signals as regards undesirable operating conditions.
Logging: To log al information, signals etc.
Load Shedding: To provide automatic and manual load shedding in emergency conditions so as to maintain system synchronism and stability.
Load Restoration: To restore loads after system returns to normal state.
Automatic Generation Control: To control generation at the power plants.

In addition to the above SCADA systems are many times used for additional tasks like security assessment, training, energy management etc.

Need for SCADA – The main reasons for adopting SCADA are as follows:

1. To reduce cost.
2. To reduce manpower
3. To reduce future capital requirements.
4. To improve level of service.
5. To avoid environmental accidents.
6. To comply with regulator requirements.
7. To attain and maintain competitive edge.
8. To replace existing ageing system.
9. To manage complex systems.

Components of SCADA – A SCADA has the following components

1. **Sensors:** These maybe digital or analog. They are basically control relays which interface with the power system.
2. Remote Terminal Units (RTUs): These are small computerized units deployed in field at specific sites and locations. RTUs are collection points for getting information and reports from sensors and for sending commands to relays.
3. Master Unit: They are basically large computer systems which serve as a central processor.
4. Communication Links
5. Software

Configurations of SCADA systems – A SCADA system may have different configurations depending upon the system and its requirements. Each configuration consists of a master unit (M) and remote unit (R). The fig.2 (a) to fig.2 (d) shows the various configurations which are used in SCADA systems.

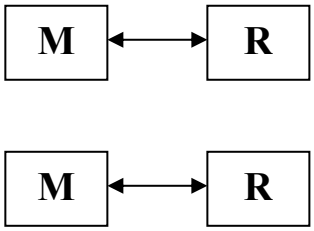

Fig.2 (a) One to One SCADA configuration

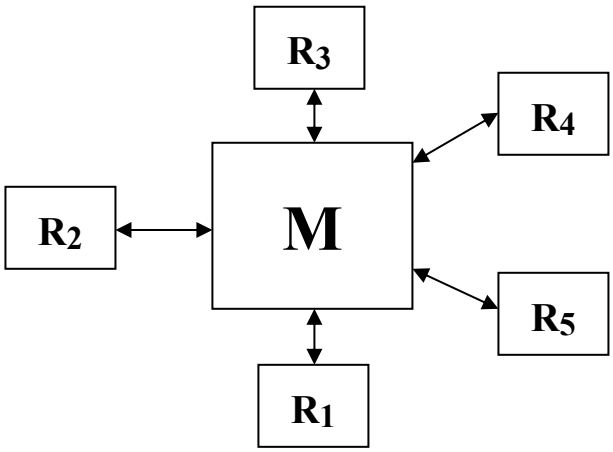

Fig.2 (b) Star SCADA Configuration

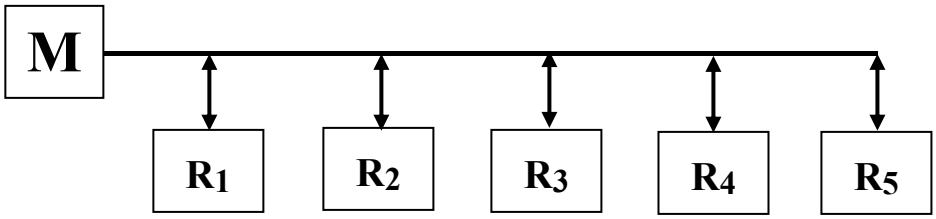

Fig.2 (c) Party line SCADA Configuration

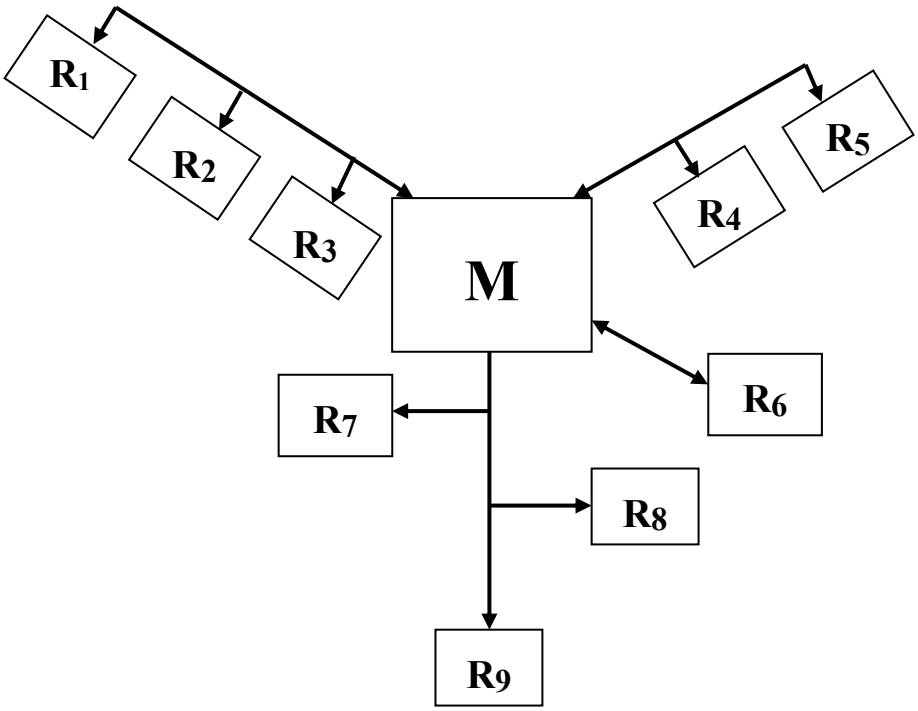

Fig.2 (d) Network Configuration

Master Unit – The fig.3 shows the layout of a typical SCADA system

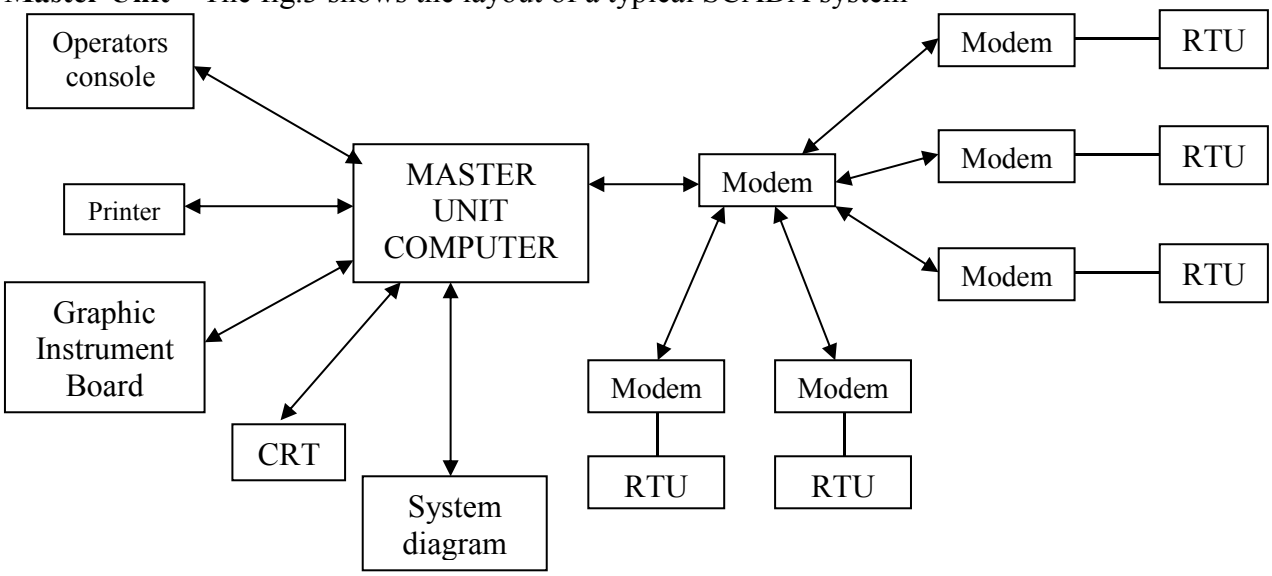

Fig.3 layout of SCADA

The master unit is the heart of SCADA system. All operations of different RTUs are made from the master unit and reported back by RTUs to the master unit. The master unit has a digital computer and ancillary equipment to permit communications between master unit and RTUs. One such equipment is a modem (modulator – demodulator). The computer uses digital pulses. Modem converts these digital pulses to analog signal so that it can be transmitted to RTU. The messages from the master unit to RTUs are in the form of audio frequency and are sent by frequency shift techniques. Frequency shift signaling is pretty immune from noise. The other equipments include line printer, operator's console, CRT (or monitor), graphic instruments board etc. The printer enables the messages received from RTUs to be converted to hard copy. Sometimes a single line diagram of the power system controlled through SCADA also exists in the master station. Digital / Analog (D/A) converters are also provided in master unit so that informations like line currents, bus voltages, frequency, real and reactive power flows as received in digital form is converted to analog form and read by various indicating instruments. Some recording instruments are also provided so that visual representation of the conditions is displayed. Colour CRT screens enable different colours to indicated changes in voltage levels, position of circuit breakers (open or closed) etc. Some flashing indications and alarm signals are used to draw the attention of operator.

For remote operations the operator at the master station follows "select before operate" procedure which is as follows:

1. The operator selects the RTU.
2. RTU acknowledges the selection.
3. Operator selects the device to be operated at that RTU.
4. RTU acknowledges that the device has been selected.
5. Operator performs the desired operation.
6. RTU performs the operation and sends a signal to master unit indicating that the desired operation has been performed. This signal maybe a message printed by printer or indication on CRT screen.

Remote Terminal Units – These units are located at selected locations in the power system. They are equipped with microcomputers and thus have logic and memory capabilities. Such

RTUs are also termed as intelligent remote terminal units. Sometimes these units can perform certain pre-programmed functions without any direction from the master unit but report all these actions to the master unit. They also have a modem to enable them to receive messages from master unit and also send compliance reports to the master unit. In addition they have relays to send trip signal to the circuit breakers and other disconnecting equipment. They are also provided with transducers to make different measurements.

In situations where many operations take place in quick succession, the RTU is fitted with sequence of events recording facility. In this case the events separated by even a few milliseconds can be recorded in correct sequence e.g. in case of a fault both phase fault and ground fault relays may operate one after the other. The sequence of events is recorded in correct order so that the protection engineer can see whether the sequence of events was correct. In all such cases the RTU reports to the master unit and then the information is erased from its memory so that RTU can record next event.

Communication Channels in SCADA – The communication channels between the master unit and RTUs form an important part of SCADA. The communication links can be wire circuit, wireless (microwave) link or power line carrier channel. The important consideration in selecting a communicating channel is the signal to noise ration (SNR) and the bandwidth. Good SNR and high bandwidth enable errorless messages and high speed of signal transmission. Most of the time a telephone line with bandwidth of 300 – 3500 Hz is sufficient. Power line carrier system has been in use in power systems for pretty long time. Capacitors rated to withstand the transmission line voltage alongwith tuned circuits are used to couple a carrier to a power circuit. The capacitive reactance of the coupling capacitors is low at carrier frequency but high at power frequency. Thus carrier channel signals can be superimposed on power circuit. Wireless channel have high efficiency and reliability.

Various Operational Stages of Power System – Power systems are interconnected to improve reliability and quality of power supply to the consumer to reduce the spinning reserve requirements of individual systems and for similar other advantages. The operating state of a power system can be divided into following modes.

1. Normal mode
2. Alert mode
3. Emergency mode
4. Restorative mode
5. In Extremis mode

The fig.4 shows the state transition diagram of a power system

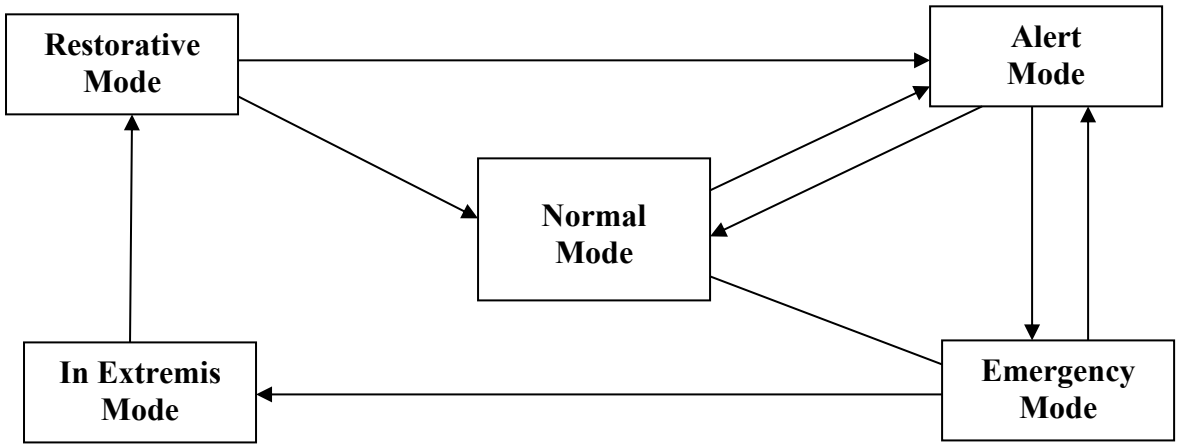

Fig.4 State Transition Diagram

In the normal mode of operation, the system has to maintain scheduled voltages, frequency and load flow profile maintaining the schedule tie line power flows. The most important aspect in any mode of operation is the matching between load demand and generation. The frequency deviation of the system is a direct measure of the mismatch between the total generation and combined load demand. It is only when the frequency is maintained at the rated value that the generation balances the load demand.

1. **Normal Mode** – When the system is in normal state the generation matches the load and none of the equipments is overloaded. The system is secure in normal state and some amount of spinning reserve also exists.
2. **Alert Mode** – In this mode of operation, the power system is synchronized but the security level is reduced below the specified limits. The generation and load are matching with none of the equipments getting overloaded. However no spinning reserve is available. In this mode, preventive control is provided to restore adequate generating margin, generation shifting, tie line rescheduling, and voltage reduction (if extremely necessary).
3. **Emergency Mode** – In this mode of operation, the power system is synchronized as the generation matches the load but some equipment may be overloaded. In this mode, immediate control is provided to clear equipment overloads, fault clearing, fast valving dynamic braking, exciter control, load control, capacitor switching and all controls mentioned in Alert state.
4. **Restorative Mode** – In this mode of operation, the power system may or may not be synchronized. The power engineers are taking necessary corrective actions so that the system is restored back to normal state. In this mode corrective measures like re-establishing viable system, generating units restarting and synchronization, load restoration, re-synchronization of different areas is done. In the restorative mode, control action is initiated but the load constraints are not completely satisfied. Under this condition, the system may be in a completely or partially shut down state.
5. **In Extremis Mode** – In this mode of operation, the power system loses synchronism resulting in tripping of some generators, and overloading of equipments also occurs. Some parts of the country (or province) may also face black out if the system is in this mode of operation. Load shedding and all the controls mentioned in emergency state are to be taken.

Power System Security – The classification of the modes or states of operation of a power system helps in distinguishing the different types of controls to be applied to the system to make the system operate reliably. The objective of power system security is to keep the power system in normal mode of operation and prevent it from entering into either emergency or restorative mode.

The system state is continuously assessed via data acquisition systems making use of telemetered data, redundant data and by predicting the missing or doubtful whenever a metering channel becomes erroneous or its accuracy is beyond the normal specified range. This job is referred to as security monitoring.

During security assessment, a series of fast computations are made to examine the effect of various credible contingencies and those that are not so. If some of the assumed contingencies result in unsatisfactory performance from the point of view of security, a corrective strategy is called for, to determine the best corrective action either by special calculations within the computer or from results obtained from off – line studies. Continuous monitoring for security and sending command signal for corrective action whenever necessary is referred to as security control. Steady state security maybe defined as the ability of the system to operate steady state wise within the specified limits of safety and supply

following a contingency in the time period, after which the fast acting control devices have restored the system balance but before the slow acting controls like transformer tappings, human decisions, etc. have responded.

Steady state security analysis is performed to determine whether there will be a new steady state operating point at which the system will settle after the post – fault oscillations have been damped out. The post contingency steady – state solution will have to be checked for violation of operational constraints. If it violates the constraints, the contingency is declared to be insecure and necessary corrective action is to be initiated.

For steady state security analysis the following contingencies maybe considered:

1. Loss of a generating unit.
2. Sudden loss of a load.
3. Sudden change in flow of power in a tie –line.
4. Outage of a transmission line.
5. Outage of a transformer.
6. Outage of a shunt capacitor or reactor being used for compensation.

The outage maybe a power outage or network outage. Fast and decoupled load flows are employed for security analysis of systems. The purpose of contingency analysis of a power system is to alert the operator about the possibility of occurring of vulnerable condition of the system on a real time basis as load and generation change. It determines the bus voltages that are excessively high or too low. It also calculates the power flows that are above the overload limits for generation and transmission lines. Precalculated results of the analysis are used to take corrective actions such as load shedding.

Voltage Stability – Voltage stability is concerned with the ability of a power system to maintain acceptable voltages at all buses in the system under normal conditions and after being subjected to a disturbance. A system enters a state of voltage instability when a disturbance, increase in load demand or change in system condition causes a progressive and uncontrollable decline in voltage. The main factor causing instability is the inability of the power system to meet the demand for reactive power.

The principle causes of voltage instability are

- ✓ Load on transmission lines is too high.
- ✓ Voltage sources are too far from the load centres.
- ✓ Source voltages are too low.
- ✓ There is insufficient load reactive compensation.

Classification of Voltage Stability – It is helpful to classify voltage stability into two categories

- Large disturbance voltage stability
- Small disturbance voltage stability

Large disturbance voltage stability is concerned with system's ability to control voltages following large disturbances such as system faults, loss of load or loss of generation. It may further be subdivided into transient and long term voltage stability. Small disturbance (or small signal) voltage stability is concerned with a system's ability to control voltages following small perturbations such as gradient changes in load.

Voltage Stability Analysis – The analysis of voltage stability for a given system state involves the examination of two aspects; (i) proximity to voltage instability (ii) mechanism of voltage stability.

(i) **Proximity to voltage instability** - We check the system for its closeness to voltage instability. The distance to instability may be measured in terms of physical quantities

such as load level, active power flow through a critical interface and reactive power reserve. Consideration must be given to possible contingencies like line outages, loss of a generating unit or a reactive power source etc.

(ii) **Mechanism of Voltage Stability** – The question which arises in a mind of a power system engineer are: How and why does instability occurs? What factors contribute towards voltage instability? What measures are most effective in improving voltage stability?

Prevention of Voltage Collapse – The voltage instability leads to voltage collapse. The following are the design and operating measures that can be taken to prevent it.

(a) System Design Measures

(i) **Application of reactive power compensating devices -** The different types of reactive power compensating devices used affect the voltage stability. Hence adequate stability margins should be ensured by proper selection of compensation schemes. The selection of sizes, ratings and locations of the compensation devices should be based on a detailed study covering the most severe system condition for which it should operate satisfactorily.

(ii) **Control of network voltage and generator reactive output** – Load compensation of a generator AVR regulates voltage on the high voltage side of the step up transformer. Alternatively, secondary outer loop control of generator excitation may be used to regulate network side voltage.

(iii) **Coordination of protection/controls** – One of the causes of voltage collapse is the lack of coordination between equipment protections/controls and power system requirements. Tripping of equipment to prevent an overload condition should be the last resort.

(b) **System Operating Measures**

(i) **Stability margin** – The system should be operated with an adequate stability margin by the appropriate scheduling of reactive power resources and voltage profile. Presently there are no widely accepted guidelines for selection of the degree of margin and the system parameters to be used as indices. These are likely to be system dependent and may have to be established based on the characteristics of the individual system.

(ii) **Spinning reserve** – An adequate spinning reactive power reserve must be ensured by the operating generators, if necessary, at moderate or low excitation and switching in shunt capacitors to maintain the desired voltage profile. The required reserve must be identified and maintained within each voltage control area.

(iii) **Operator's action** – The operators must be able to recognize voltage stability related symptoms and make appropriate remedial actions such as voltage and power transfer controls and possibly as a last resort , load shedding.